DOOR ENTRY ONLINE
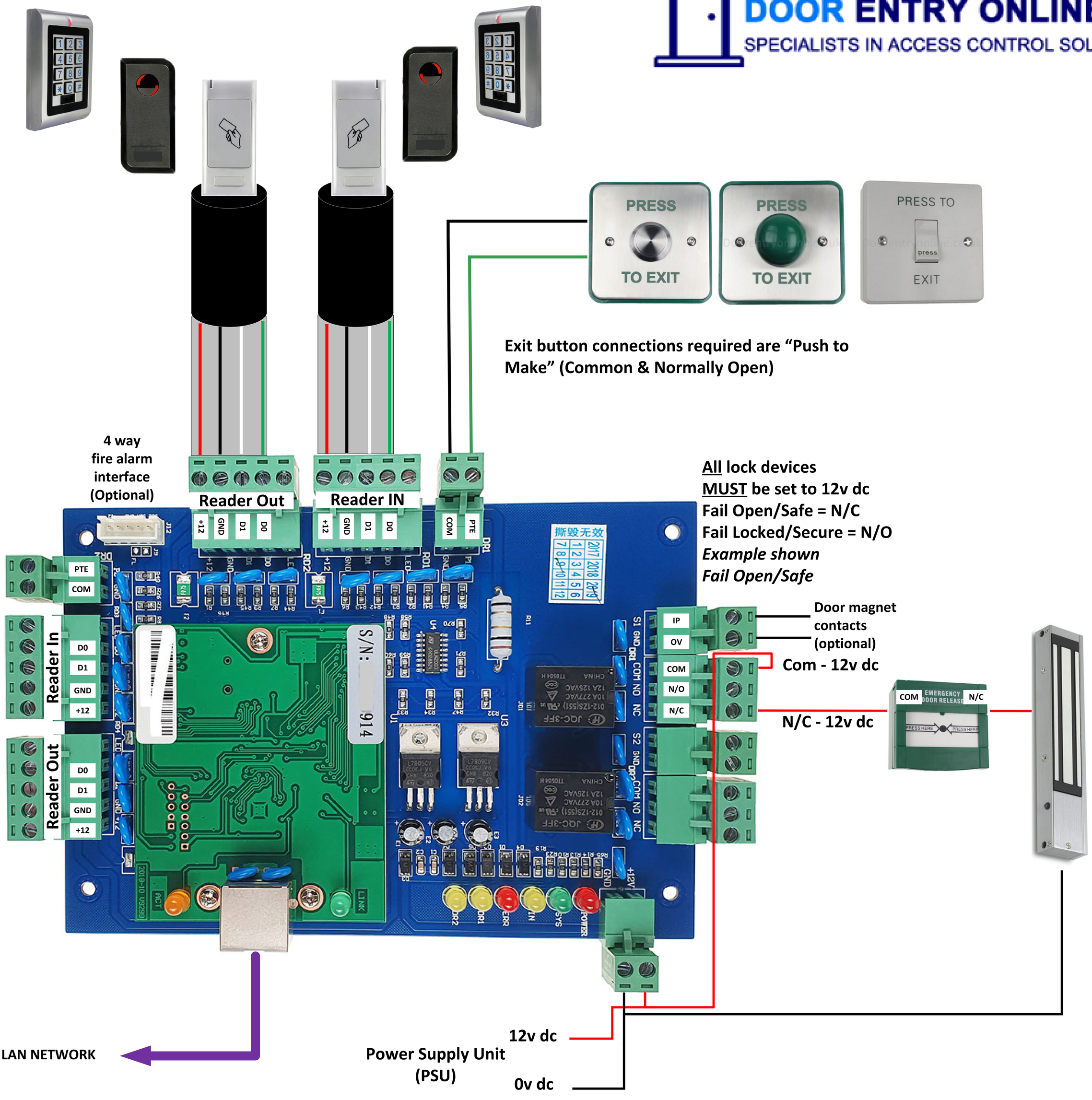
SPECIALISTS IN ACCESS CONTROL SOLUTIONS