Basic System Layout

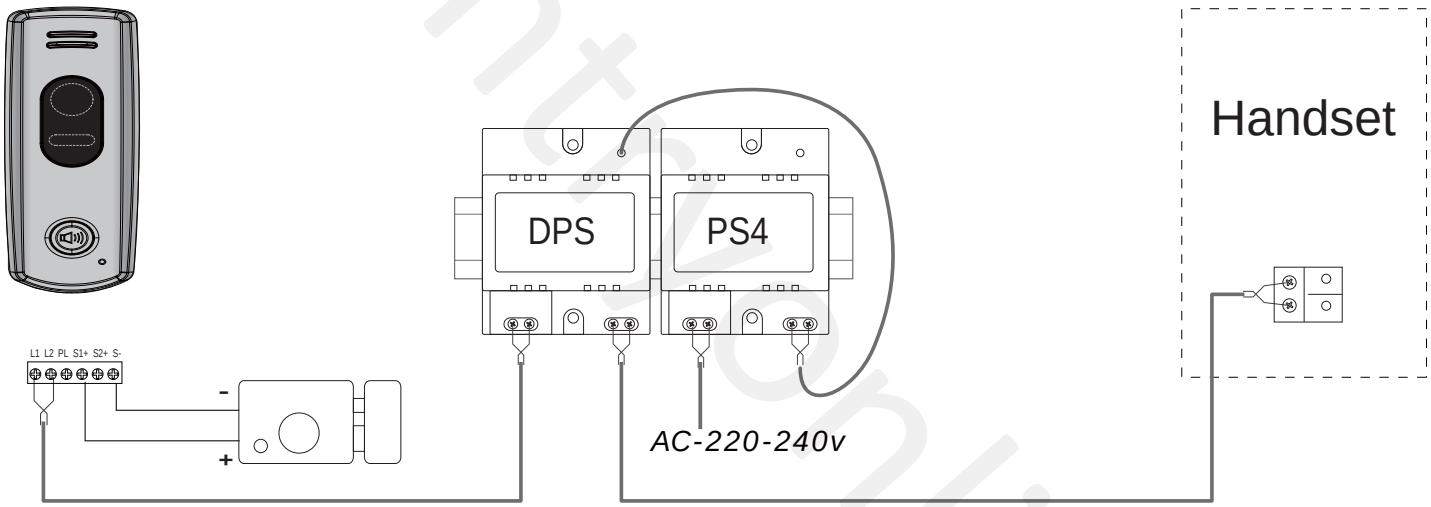

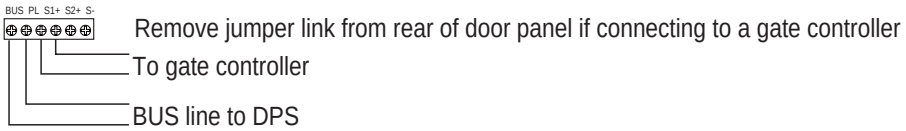

Doorentry-online Ltd

Single Door Panel With Multi Handsets

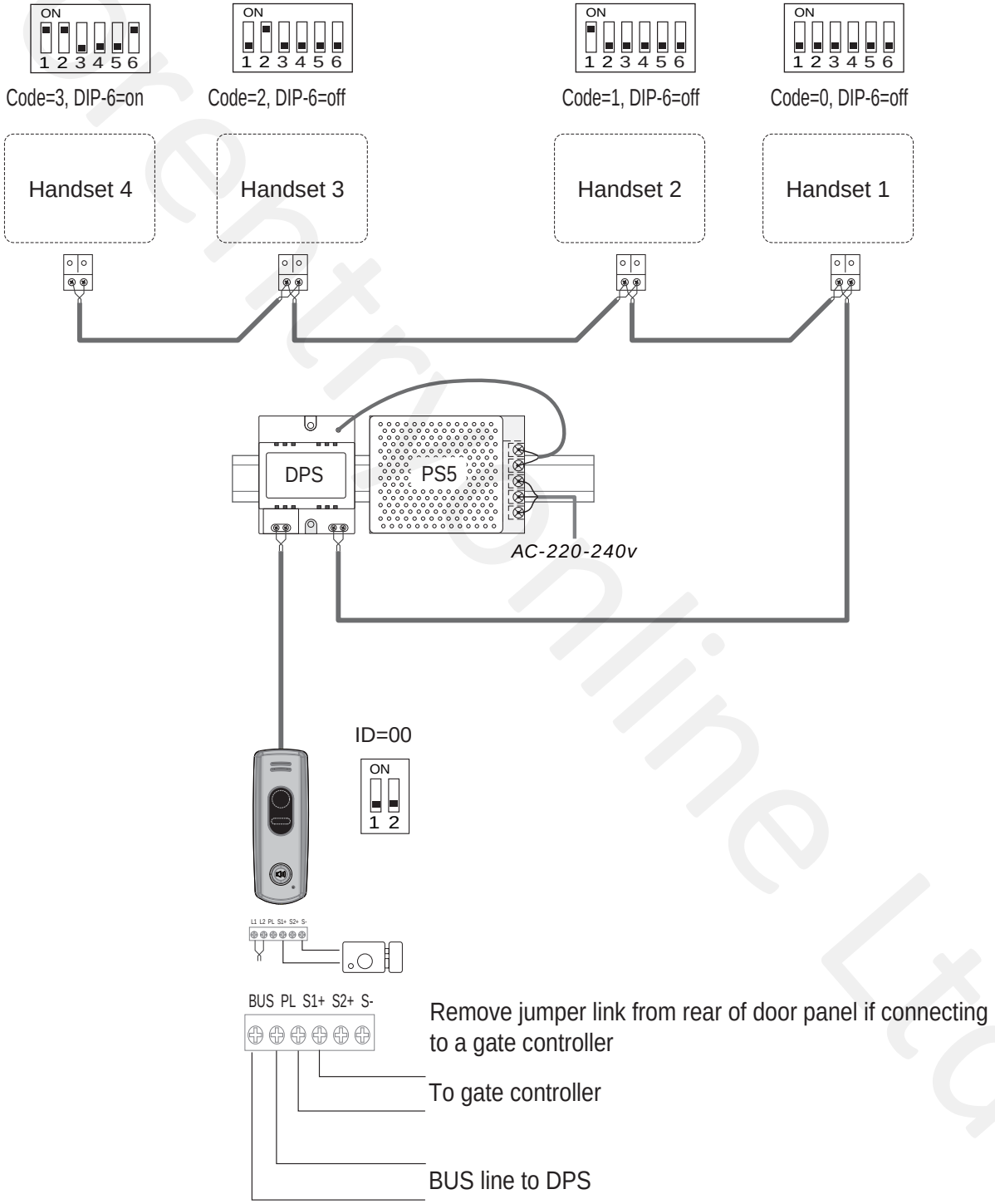

Doorentryonline Ltd

Single Door Panel With Multi Handsets Using DBC4S

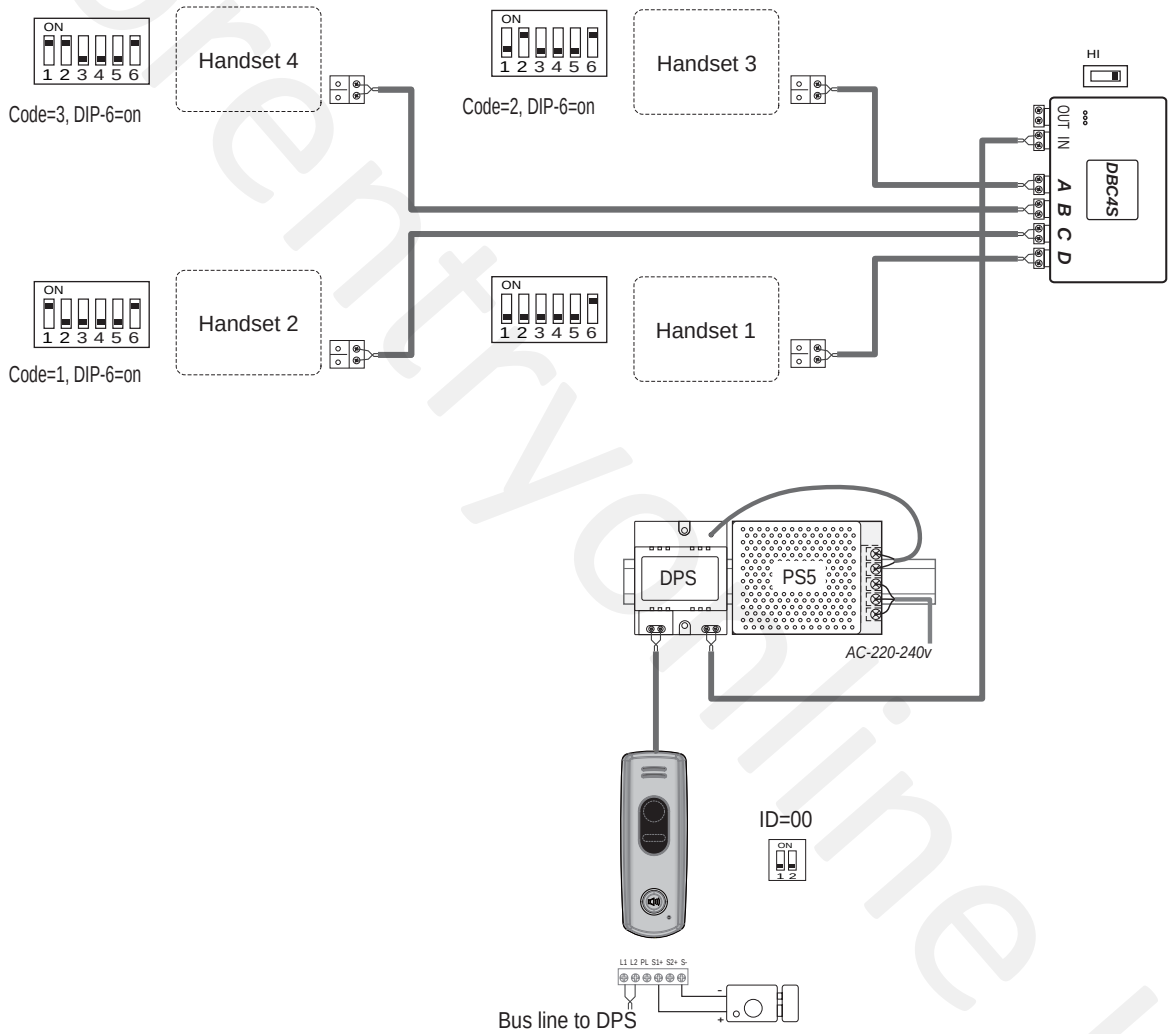

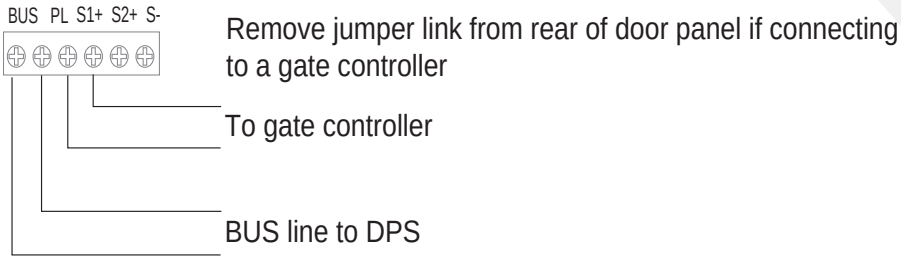

Doorentrycline Ltd

Multi Door Panel With Multi Handsets

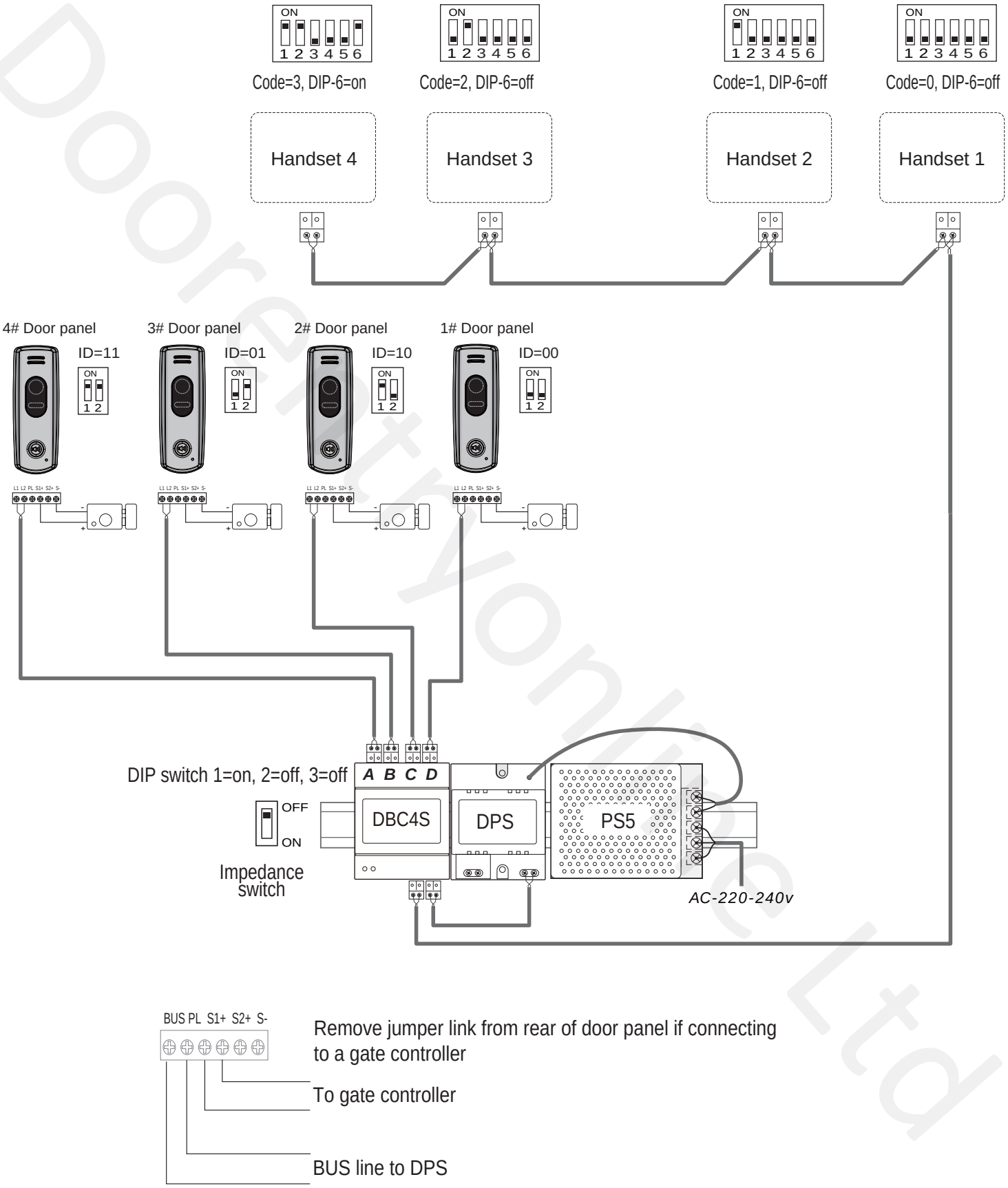

Doorentkyonline Ltd

Multi Door Panel With Multi Handsets using DBC4S

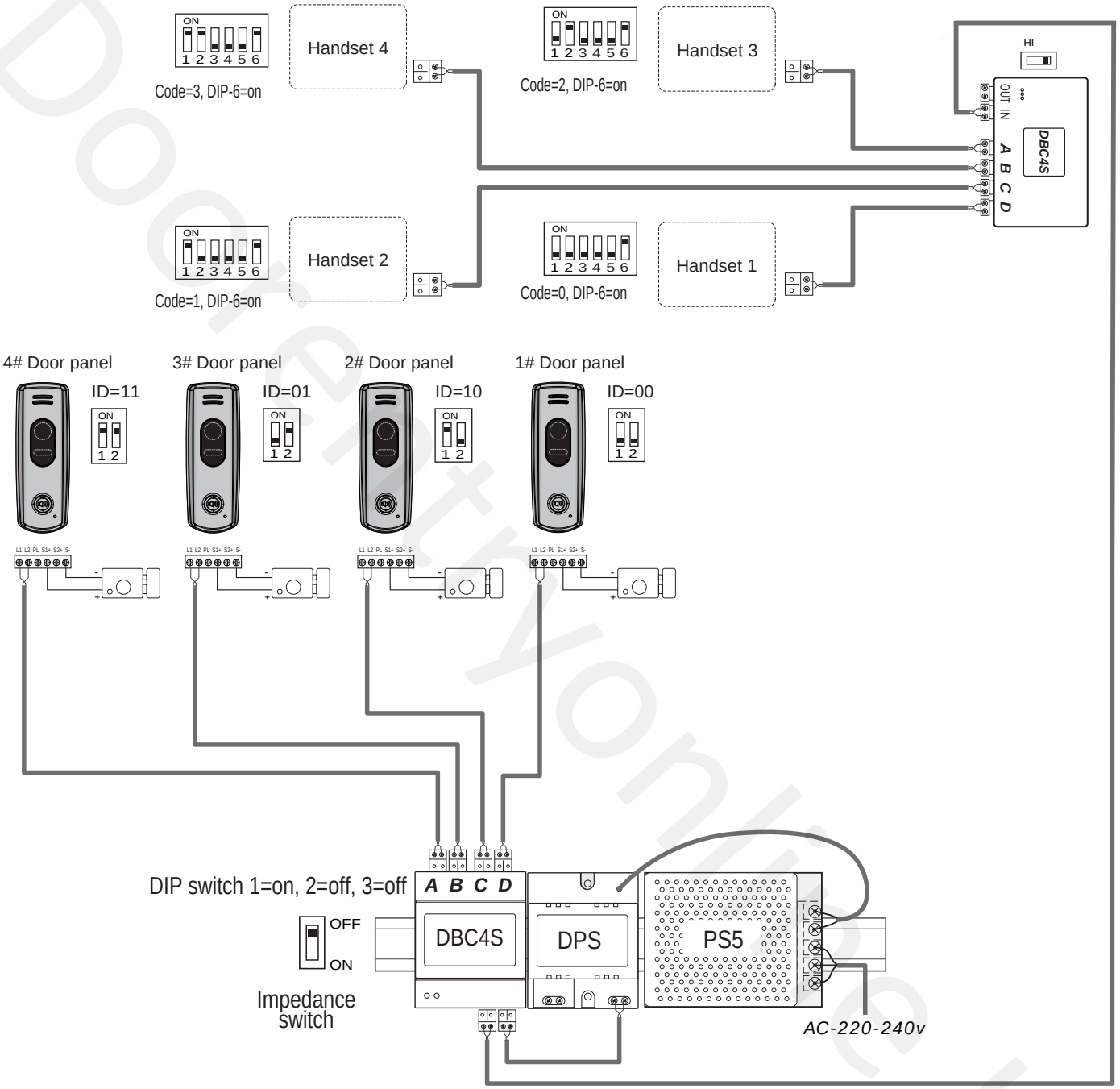

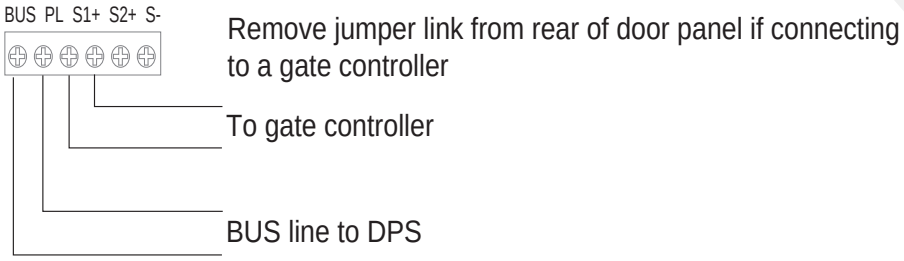

Doorentkyonline Ltd

Connecting to Magnetic Lock - All Systems

Important:
1) The PS5 power supply & TR1 relay is required for all installations using a magnetic lock
2) Ensure the magnetic lock is set for 24v dc operation
3) Remove the black jumper link from the rear of the relevant door panel

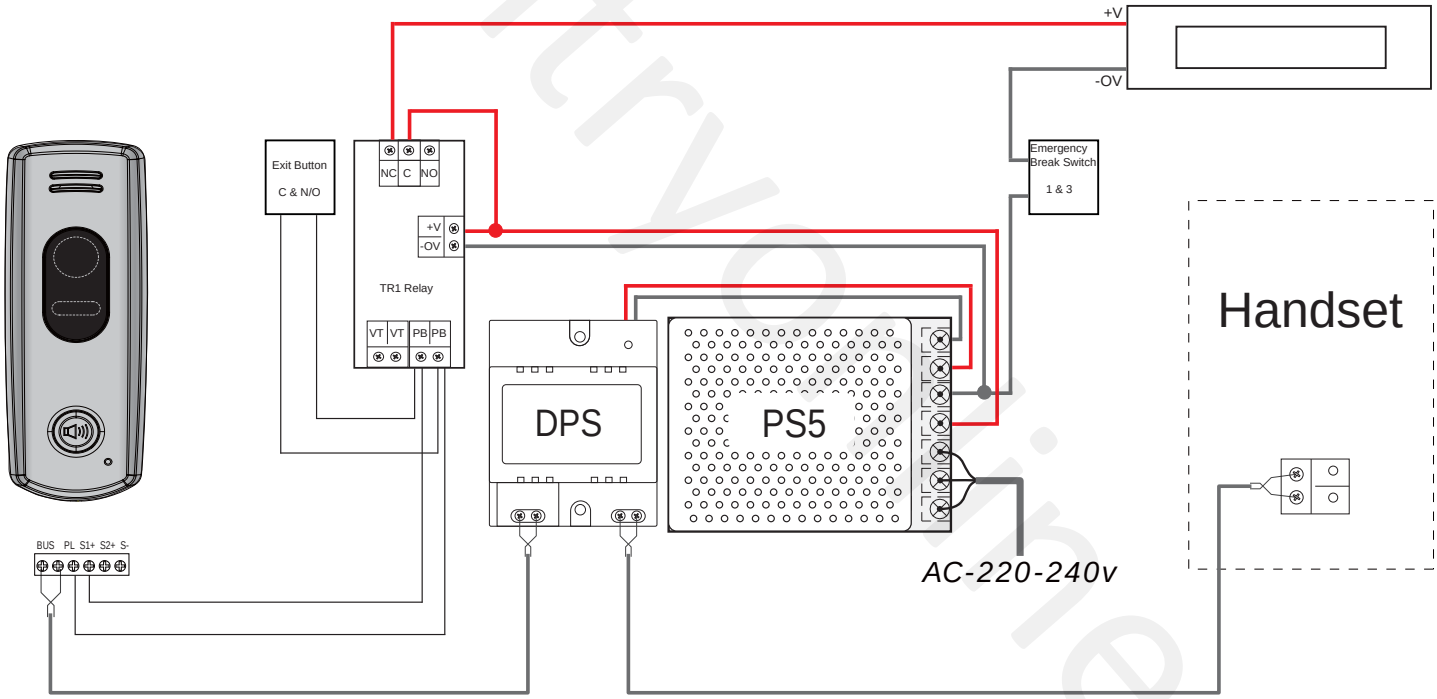

Doorentryonline Ltd